MAPX	MODIFICATION	DATE

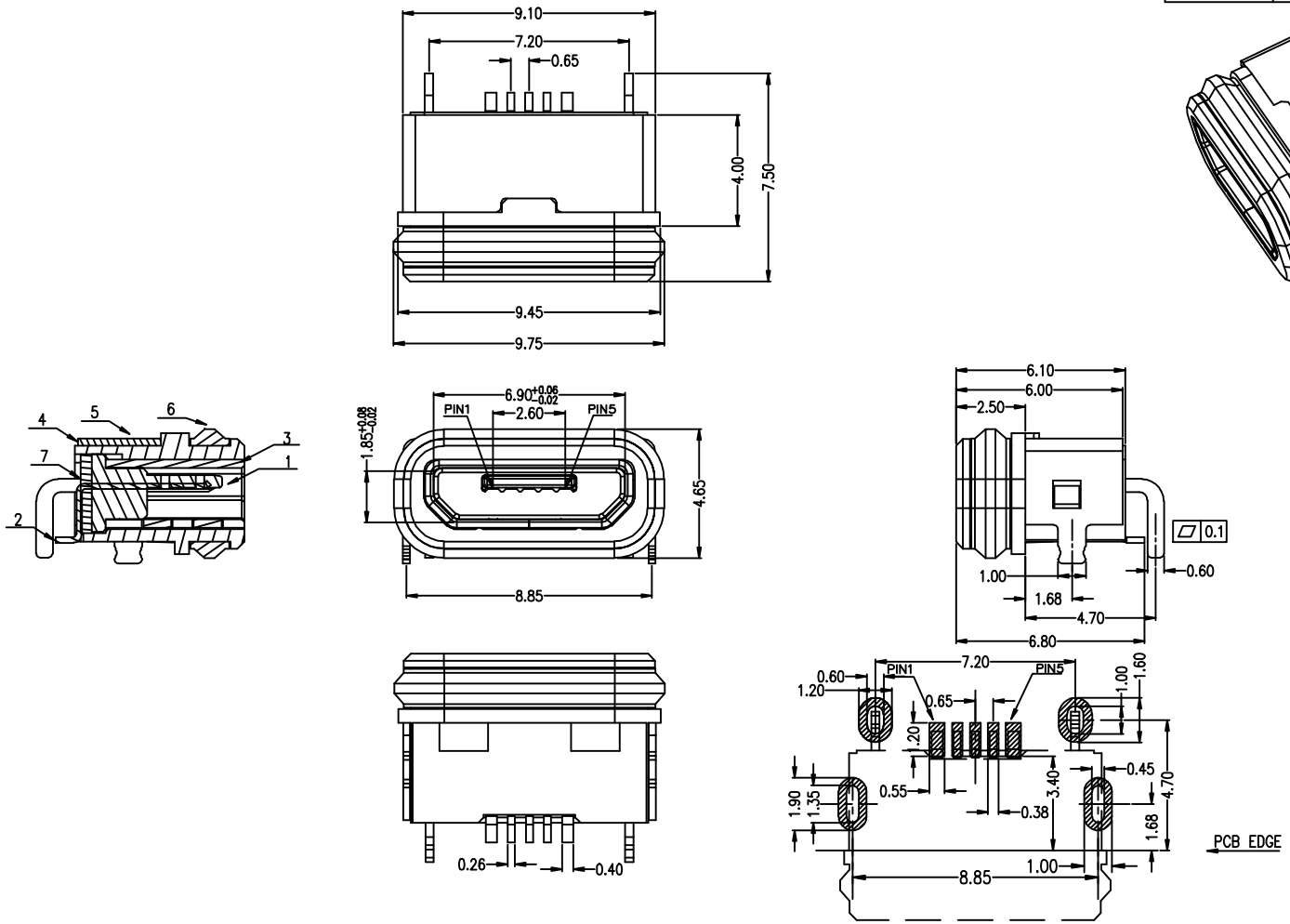

RECOMMAND PCB LAYOUT

PCB图仅供参考

Note:

1.Material:

1.1 Housing: High temperature thermoplastic
1.2 Contact: copper alloy,t=0.20mm
1.3 Shell: SUS304,t=0.30mm
1.4 cover: High temperature thermoplastic
1.5 out Shell: SUS304 T=0.25
1.6 Ring: SILICON
1.7 Epoxy: Epoxy

2.Specification:

2.1 Current rating:1,5PIN 2.0A Max/2,3,4PIN 1A Max.
2.2 Dielectric withstanding voltage: 100 V(ac) for 1 min.
2.3 Contact resistance: 30 mΩ Max.
2.4 Insulation resistance: 100 MΩ Min.
2.5 Total mating force: 3.57 Kgf Max.
2.6 Total unmating force: 1.0 Kgf Min.
2.7 Temperature range: -30°C~80°C
2.8 Waterproof: IPX 7.

产品图 PRODUCT CHART DWG			深圳市精拓金电子有限公司					
公差一览表 TOLERANCE UNLESS OTHERMSE			单位 UNITS	MM	制图 DRAWING	YANG	制图料号 PRODUCT PART NO.	920-A64A2051S101A2
X.	±0.30 X.	±5.°	比例 SCALE	1:1	审核 CHKD	郭志富	产品名称 PRODUCT NO.	MICRO 5PIN B型防水L6.1四脚插板端子SMT黑胶
.X	±0.25 .X	±2.°	日期 DATE	2019.11.23	核准 APPD	黄国荣	角法 VIEW	版本 VER AO
.XX	±0.15 .XX	±1.°						
.XXX	±0.10 .XXX	±0.5°						