MAPX	MODIFICATION	DATE

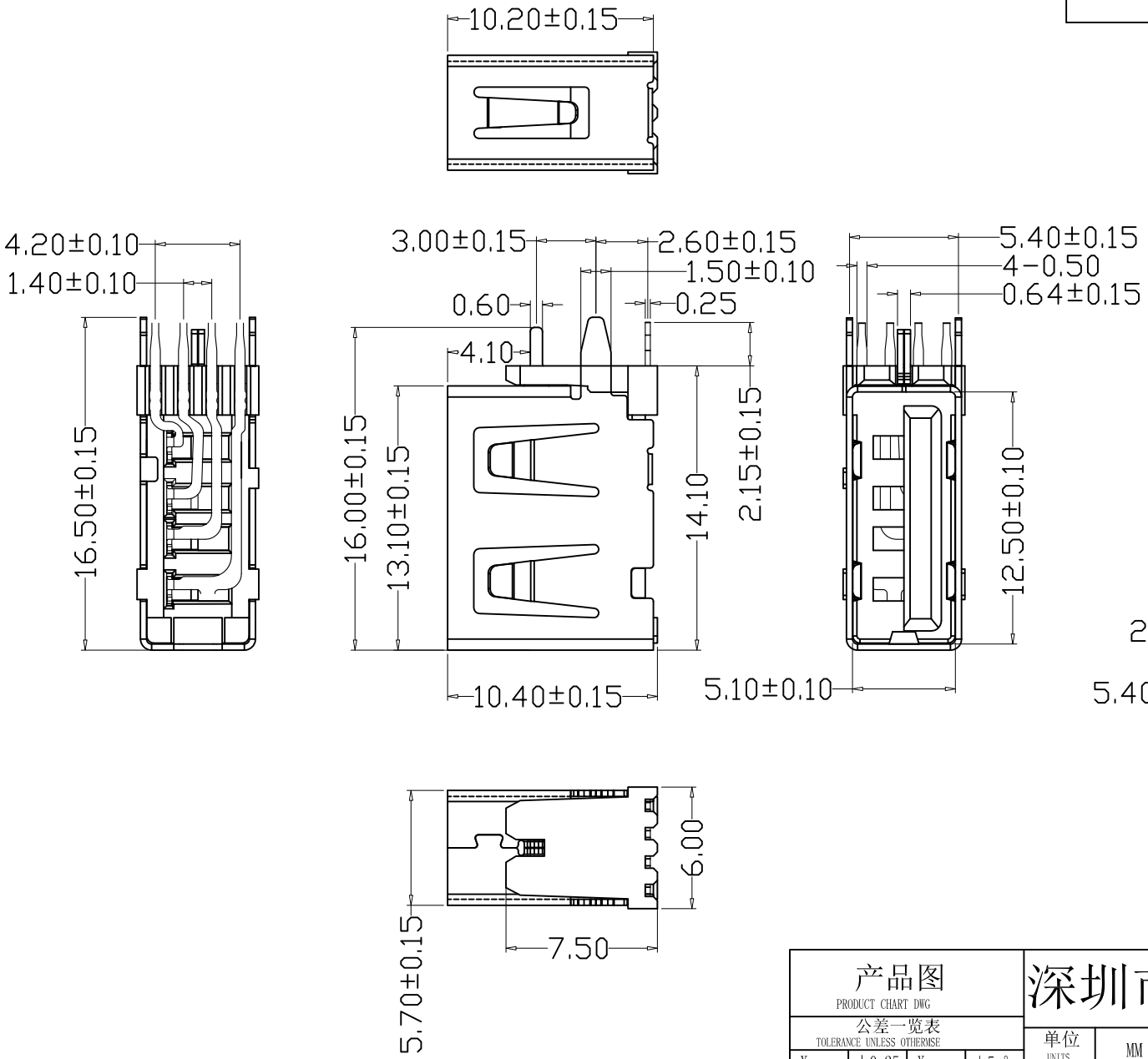

NOTE:
1. Material:
   Housing: Thermoplastics
   Contact: Phosphor Bronze C5191-EH/C2680-EH, T=0.25mm
   Shell: COPPER ALLOY T=0.30mm
2. FINISH:
   Contact: 15u" Gold Plated on Contact Area,
   80u" Min.Tin Plated on Solder Area
   50u" Min.Nickel Underplating Over All.
   Shell: 50u" Min.Nickel Underplating Over All.
3. Specification:
   3.1: Rating:
   Rated voltage 500V AC/DC. Rated current: 2 A Max.
   3.2: Electrical:
   Insulation Resistance(EIA-364-21):
   1000MΩ Min. at 500V/DC for 1Minute.
   Contact Resistance(EIA-364-23):
   30 mΩ Max. at 20mV Max, 50mA
   Dielectric Withstanding Voltage(EIA-364-20):
   No discharge, flashover or breakdown at 500V/AC 1Minute
4. Plug extraction force shall be between 1.0kgf and 2.00kgf
5. Contact finish:
   01: Selective Gold Flash
   02: Selective Gold 3U"
   03: Selective Gold 5U"
   04: Selective Gold 15U"
   05: Selective Gold 30U"

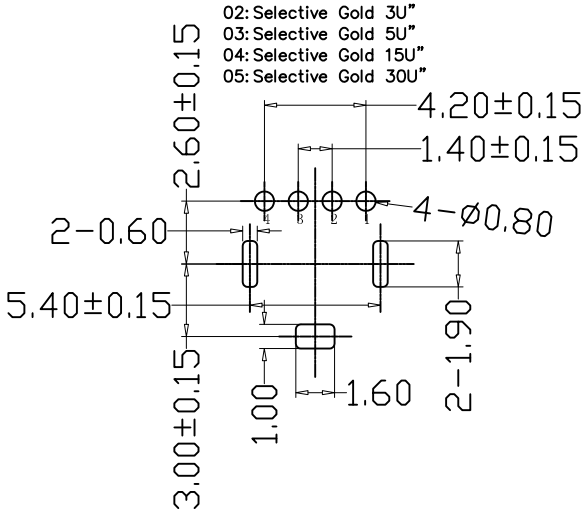

RECOMMENDED PCB LAYOUT
GENERAL TOLERANCES: ±0.05

产品图 PRODUCT CHART DWG			
公差一览表 TOLERANCE UNLESS OTHERWSE			
X.	±0.25	X.	±5.°
.X	±0.20	.X	±2.°
.XX	±0.15	.XX	±1.°
.XXX	±0.10	.XXX	±0.5°

深圳市精拓金电子有限公司

单位 UNITS	MM	制图 DRAWING	Z-Y-B	制图料号 PRODUCT PART NO.	906-162A1116D10200		
比例 SCALE	1:1	审核 CHKD		产品名称 PRODUCT NO.	AF10.0侧插短体三直脚无边铜壳 PBT加厚橙胶		
日期 DATE	2014.02.20	核准 APPD		角法 VIEW		版本 VER	A0